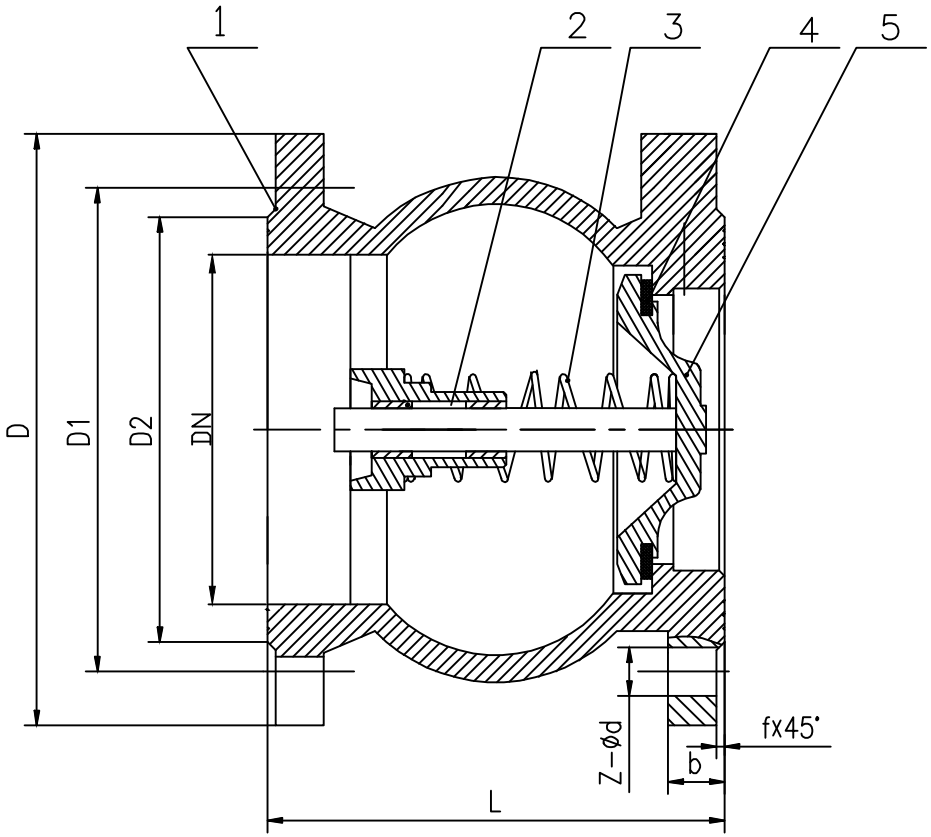

DN	L	D	D1	D2	b	f	Z-d
50	100	165	125	102	18	3	4-19
65	120	185	145	122	19	3	4-19
80	140	200	160	138	20	3	8-19
100	170	220	180	158	21	3	8-19
125	200	250	210	188	22	3	8-19
150	230	285	240	212	24	3	8-23
200	288	340	295	268	24	3	12-23
250	354	405	355	320	26	3	12-28
300	410	460	410	378	26	4	12-28

5	DISC	GGG40	
4	GASKET	RUBBER	
3	SPRING	STAINLESS STEEL	
2	GUIDE SLEEVE	STAINLESS STEEL	
1	BODY	GG25	
NO	NAME	MATERIAL	

DESCRIPTION

1. Flanges drilled to DIN 2533
2. Working pressure:PN16

Assembly

PN16 SILENT CHECK VALVE